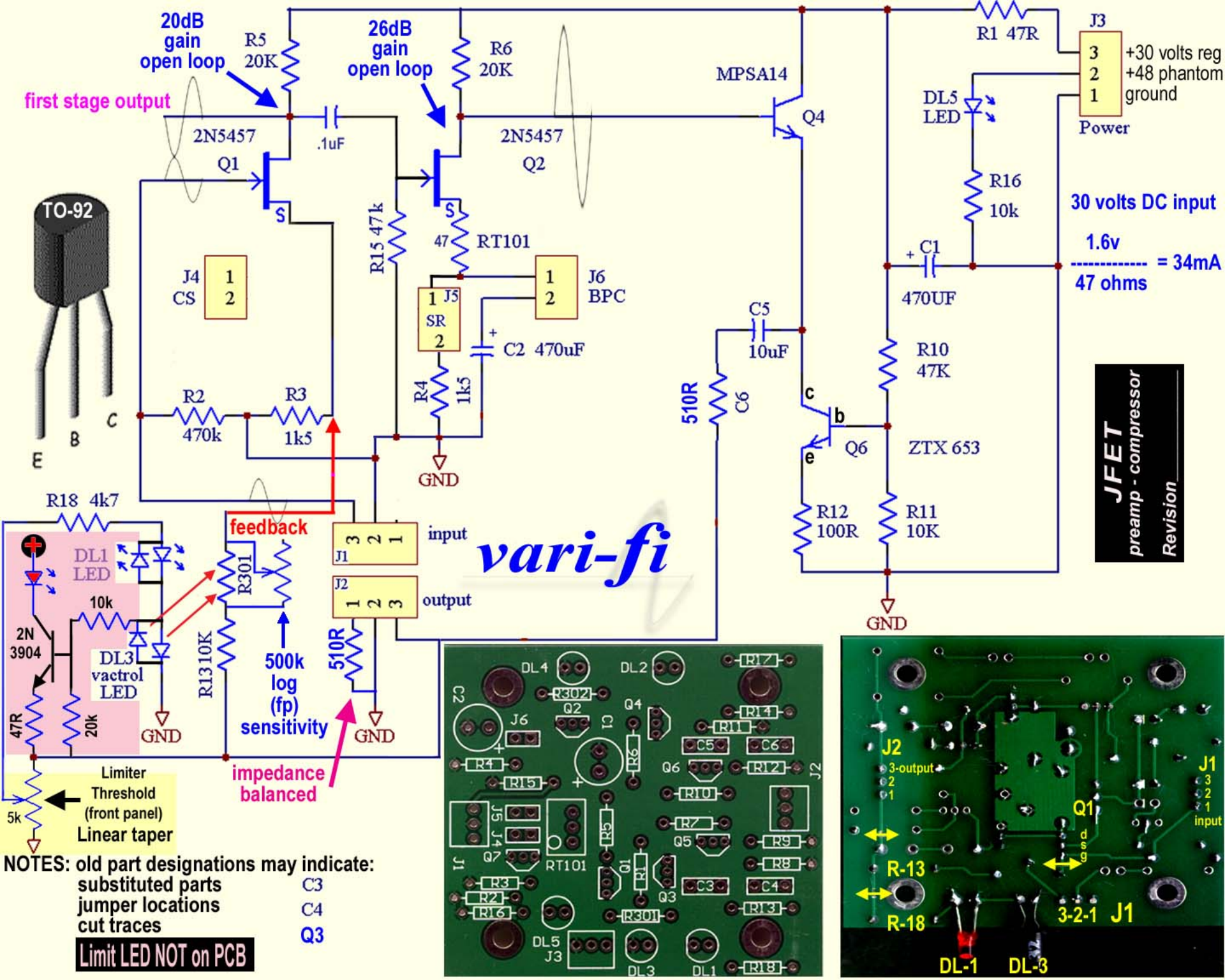
20dB gain open loop
R5 20K
26dB gain open loop
R6 20K
first stage output
2N5457
Q1
.1uF
2N5457
Q2
MPSA14
Q4
R1 47R
J3
+30 volts reg
+48 phantom
ground
Power
DL5 LED
R16 10k
30 volts DC input
1.6v
= 34mA
47 ohms
C1 470UF
TO-92
E B C
J4 CS
R15 47k
47 RT101
J5 SR
J6 BPC
C2 470uF
R4 1k5
R2 470k
R3 1k5
GND
C5 10uF
510R C6
R10 47K
Q6 ZTX 653
R12 100R
R11 10K
JFET
preamp - compressor
Revision
R18 4k7
DL1 LED
10k
2N 3904
DL3 vactrol LED
47R
20k
R301
R13 10K
feedback
500k log (fp) sensitivity
J1 input
J2 output
510R
vari-fi
impedance balanced
Limiter Threshold (front panel)
5k
Linear taper
NOTES: old part designations may indicate:
substituted parts
jumper locations
cut traces
Limit LED NOT on PCB
C3
C4
Q3
J2 3-output
J1 input
Q1
R-13
R-18
3-2-1 J1
DL-1
DL-3