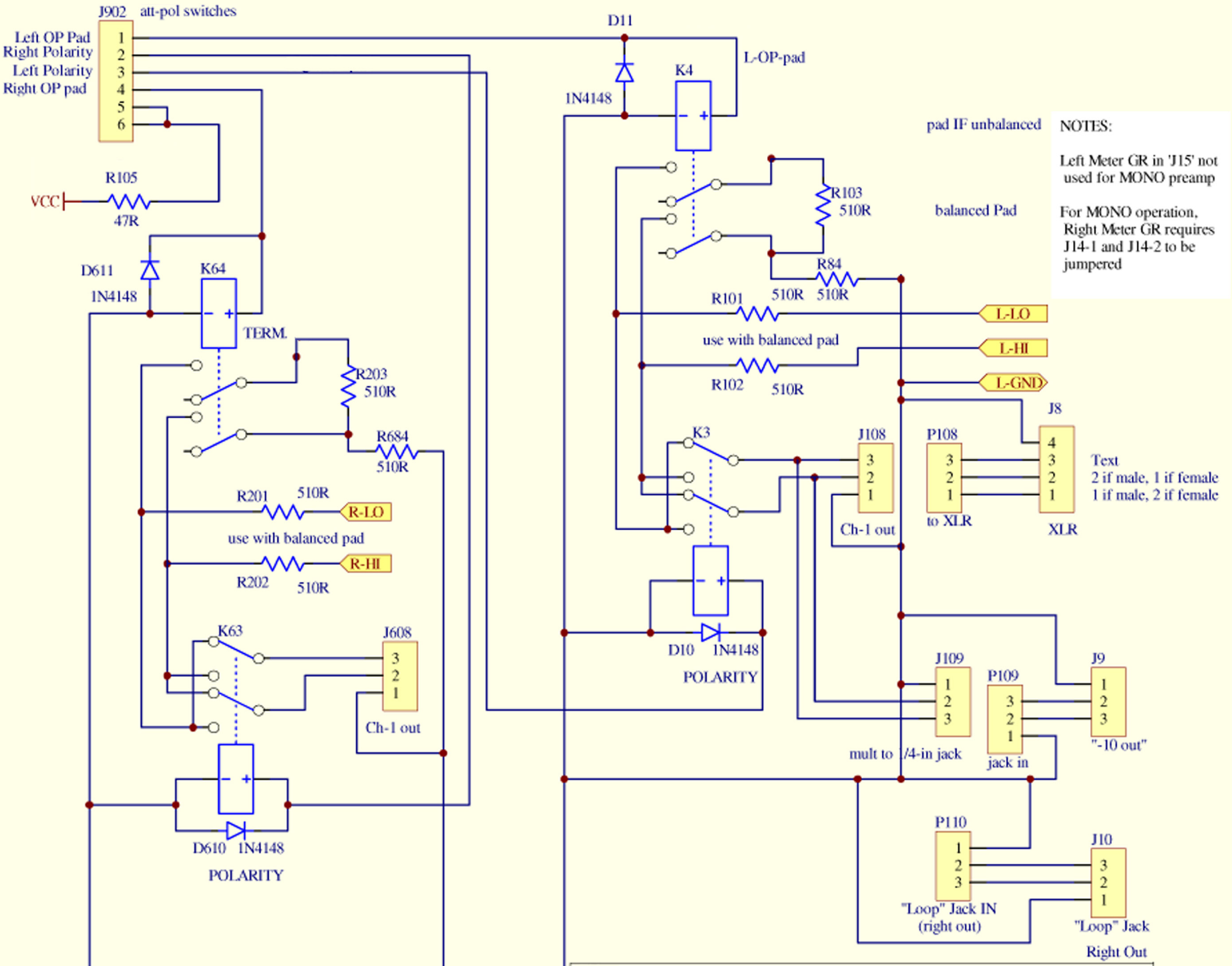
J902
att-pol switches
Left OP Pad
Right Polarity
Left Polarity
Right OP pad
1
2
3
4
5
6
VCC
R105
47R
D611
1N4148
K64
TERM.
R203
510R
R684
510R
R201
510R
R-LO
use with balanced pad
R202
510R
R-HI
K63
J608
3
2
1
Ch-1 out
D610
1N4148
POLARITY
D11
1N4148
K4
L-OP-pad
pad IF unbalanced
R103
510R
balanced Pad
R84
510R
R101
510R
L-LO
use with balanced pad
R102
510R
L-HI
L-GND
K3
J108
3
2
1
Ch-1 out
P108
3
2
1
to XLR
J8
4
3
2
1
XLR
Text
2 if male, 1 if female
1 if male, 2 if female
D10
1N4148
POLARITY
J109
1
2
3
mult to
/4-in jack
P109
3
2
1
jack in
J9
1
2
3
"-10 out"
P110
1
2
3
"Loop" Jack IN
(right out)
J10
3
2
1
"Loop" Jack
Right Out
NOTES:
Left Meter GR in 'J15' not used for MONO preamp
For MONO operation, Right Meter GR requires J14-1 and J14-2 to be jumpered
Vari-Fi DI and Mic preamplifier