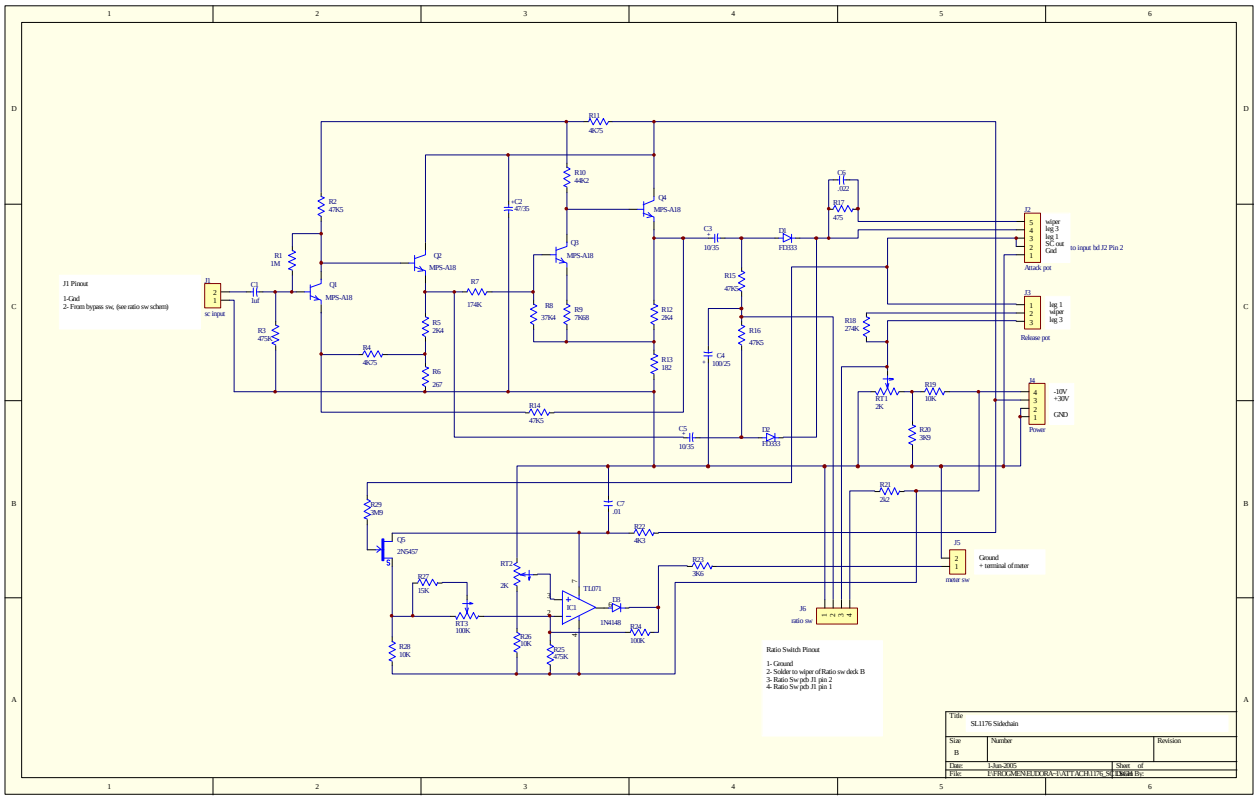
J1 Pinout
1-Gnd
2- Frorm bypass sw, (see ratio sw schem)
J1
sc input
C1
1uf
R1
1M
R2
47K5
R3
475K
Q1
MPS-A18
Q2
MPS-A18
R4
48C75
R5
2K4
R6
267
R7
174K
+C2
47/35
R8
37K4
R9
79K68
Q3
MPS-A18
R10
44K2
R11
48C75
Q4
MPS-A18
R12
2K4
R13
1H2
R14
47K5
C3
10/35
D1
FD333
R15
47K5
C4
100/25
R16
47K5
C5
10/35
D2
FD333
C6
.022
R17
475
J2
wiper
lag 3
lag 1
SC out
Gnd
to input bd J2 Pin 2
Attack pot
J3
lag 1
wiper
lag 3
Release pot
R18
274K
RT1
2K
R19
10K
R20
3K9
J4
-10V
+30V
GND
Power
R21
262
R29
8M9
C7
.01
R22
4K3
Q5
2N5457
S
RT2
2K
R27
15K
RT3
100K
R26
10K
R25
475K
R28
10K
IC3
TL071
D3
1N4148
R24
100K
R23
3K6
J5
Ground
+ terminal of motor
motor sw
J6
ratio sw
Ratio Switch Pinout
1- Ground
2- Solder to wiper of Ratio sw deck B
3- Ratio Sw pcb J1 pin 2
4- Ratio Sw pcb J1 pin 1
Title
SL1176 Sidechain
Size
B
Number
Revision
Date: 1-Jun-2005
Sheet of
File: C:\FRO\OMENFLOORA-1\ATTACH\1176_SC.SCH
Drawn By: